Mounting Kit

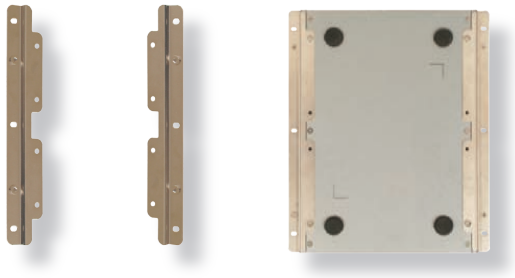

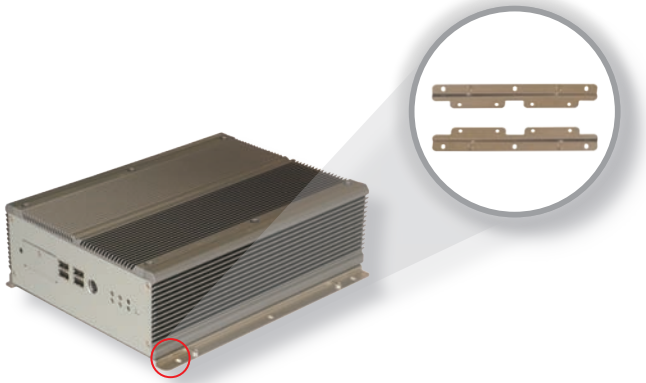

WMK-7000

Specifications

Material	SPCC + Ni

Ordering Information

WMK-7000	Wall-mount kit of FPC-7XXX

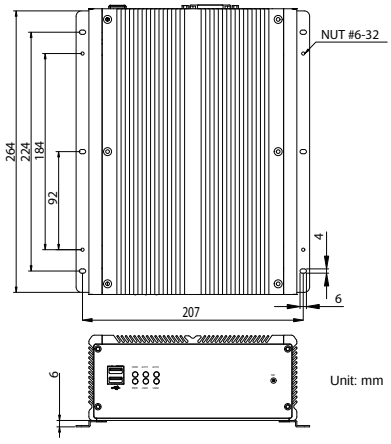

WMK-5000

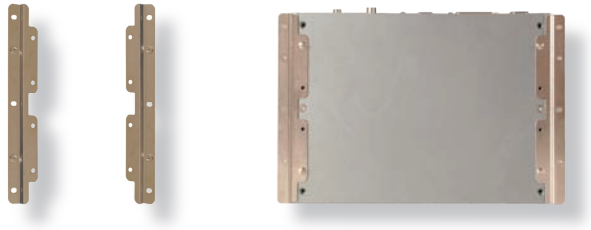

Specifications

Material	SPCC + Ni

Ordering Information

WMK-5000	Wall-mount kit of FPC-51XX

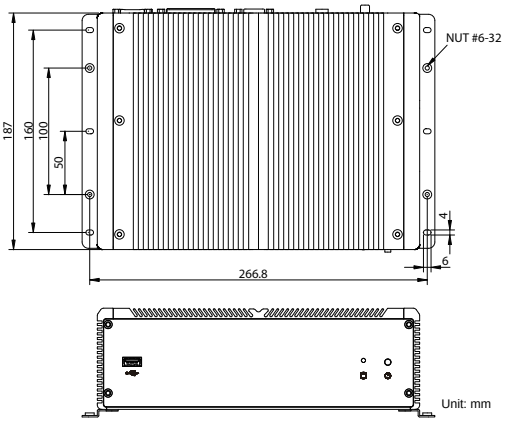

All specifications are subject to change without notice.

Mounting Kit

WMK-3100

Specifications

Color & Material	Grey, SECC

Ordering Information

WMK-3100	Wall-mounting kit of FPC-31xx

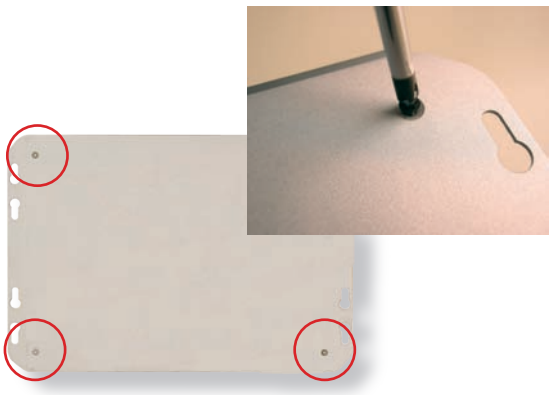

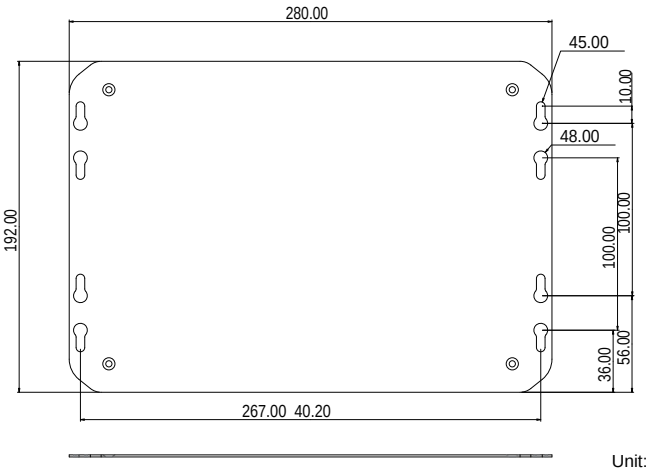

Unit: mm

VMK-3100

Specifications

Color & Material	Grey, SECC
Display Compatibility	VESA 100/200 mm

Ordering Information

VMK-3100	VESA mounting kit of FPC-31xx

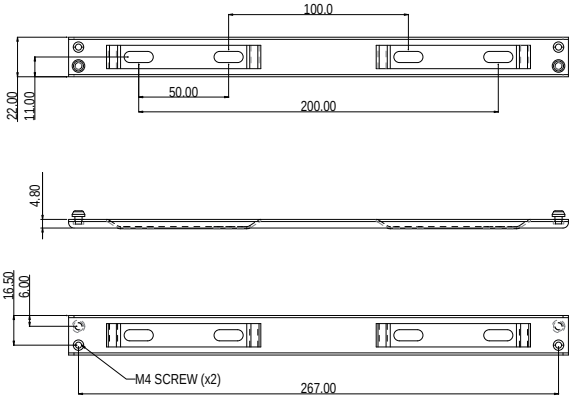

Unit: mm

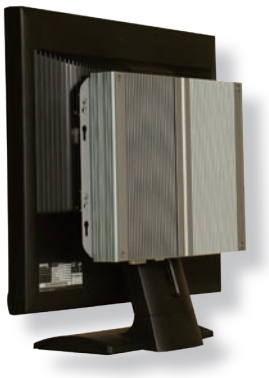

All specifications are subject to change without notice.